Superconducting lightweight generator for large offshore wind turbine

Iker Marino
Iker.marino@tecnalia.com

tecnalia Inspiring Business

ZIEHL IV, Bonn
12th March 2014

Who we are

Our mission: To transform knowledge into GDP, improving people's quality of life by generating business opportunities for companies

TECNALIA is the first Applied Research Centre in Spain and one of the most important in Europe with around 1.500 staff, 110 million Euro turnover and over 4.000 clients.

CONTENT

- Offshore wind
- Superconducting generators
- Comparative study
- Conclusion

Offshore Wind Market

Offshore Wind cumulative market

	2020	2030	2050
Europe	40 GW	150 GW	460 GW
World	100 GW	375 GW	1150 GW

Cumulative Business volume-Offshore Wind

	-2020	2020-2030	2030-2050
Europe	180.000 M€	565.000 M€	1,34 B€
World	450.000 M€	1,412 B€	3,35 B€

***Source**: EWEA and IEA*

***Cost per installed MW**: 4,5 M€/MW (2020); 3,5 M€/MW (2030); 2,5 M€/MW (2040)*

Huge business volume expected for the upcoming years.
But **severe cost reductions** are demanded to reach these predictions

Market demands "more powerful and reliable wind turbines to reduce offshore wind farm capital and operation expenses"

LCOE comparison between 2 x 3MW and 1 x 6MW turbine

DRIVER		3 MW turbines	6 MW turbine	IMPROVEMENT	
CAPEX [EUR m/MW]	Turbine	1.35	1.55	+15%	-6%
	Balance of plant	2.55	2.10	-18%	
Capacity factor [%]		43	48	+12%	
O&M costs [EUR '000/MW/year]		140	120	-14%	
LCoE[1)] [EUR ct/kwh]		13.4	11.1	-17%	

Source: Roland Berguer. Offshore Wind Towards 2020. April 2013

But…8/10 MW barrier

the current wind generators are difficult to scale up to 10 MW and beyond.
Huge generator size and weight drive up the cost of structure, foundations and installation operations.

Superconductivity

is the only technology able to achieve a radical reduction of the generator mass

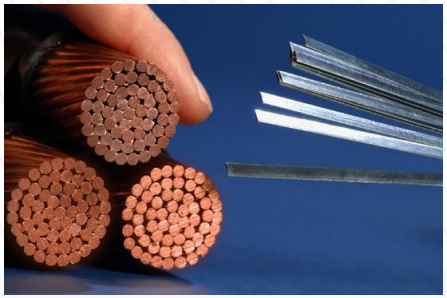

Over 100 times more current than copper wire of the same dimensions.

Cost reduction pathways

Exhibit 3.30 Potential and anticipated FID 2020 LCOE impact* of top 12 innovations for 6MW-Class Turbine, Site B)

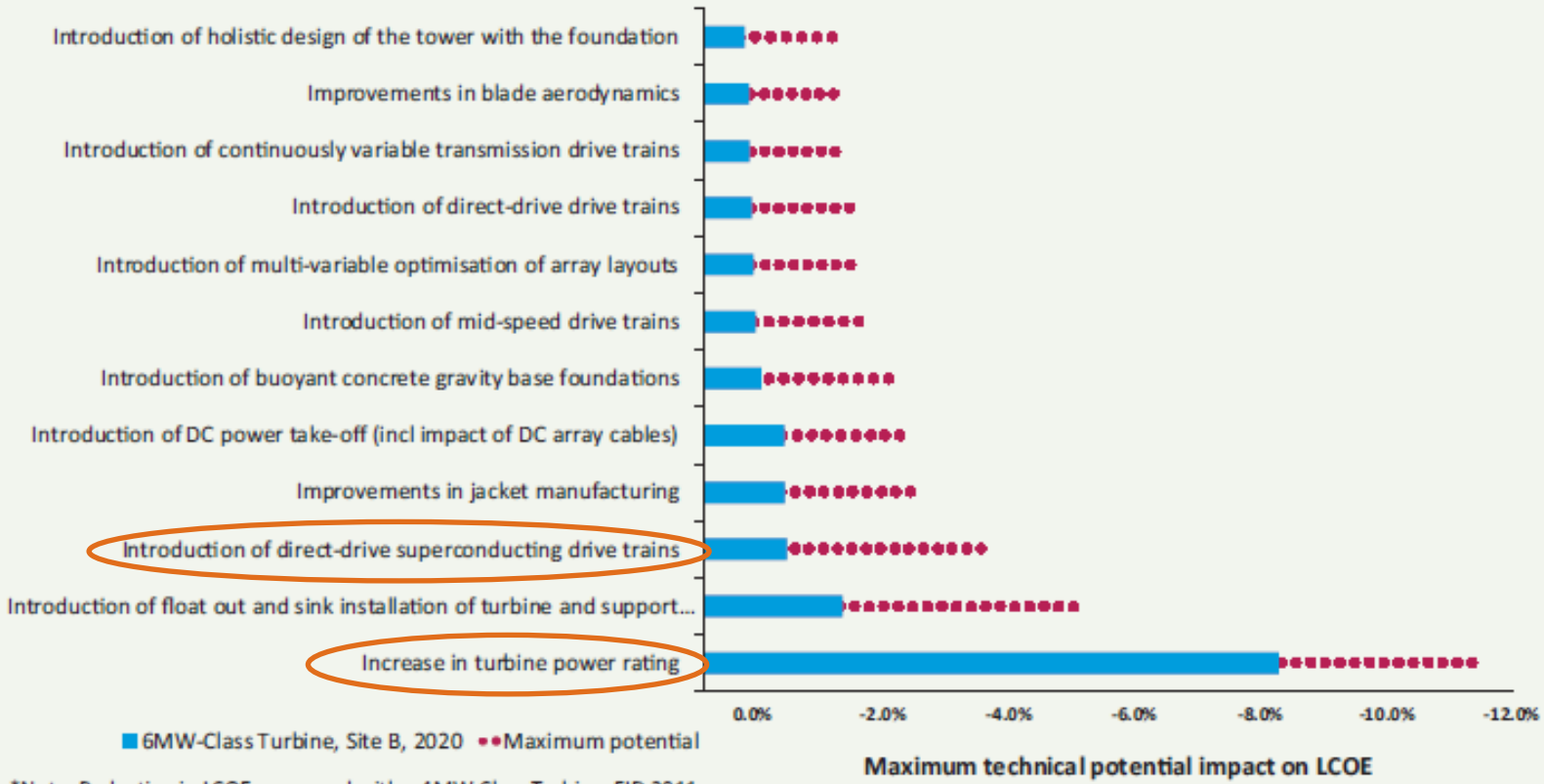

*Note: Reduction in LCOE compared with a 4MW-Class Turbine, FID 2011. Only considers relevant innovations.

Source: Technology work stream report

CONTENT

- Offshore wind
- Superconducting generator
  - Superconducting low speed machines
  - MgB_2 cryogen free generator
- Comparative study
- Conclusion

Superconductors for low speed rotating machines

Specific Power ($^{kW}/_{m3}$): $P/_V \propto B \cdot A \cdot \omega$

ω(rad/s): rotating speed

B (T): Air-gap Magnetic flux

A (A/m): Linear current density (depends on stator winding)

B↑ Superconductors have the ability to produce higher magnetic flux (B) than conventional PM generator

↓

A↑ High B requires to eliminate stator teeth →air-gap winding is required but more space is available → more copper coils can be introduced → Higher A can be achieved

↓

Higher power rate, lighter and more compact generators

Superconducting generators for wind turbines

- There are several superconducting generator concepts, as those proposed by GE, AMSC, RISO-DTU or AML.
- In general they show relevant challenges as:
  - LTS generators require complex and very low efficiency cooling systems.
  - HTS generators use expensive materials (1G and 2G HTS), with uncertain cost reduction perspectives.
  - Cryogenic fluids based cooling system are too complex and have low reliability for offshore locations.

Material type	Operating T	Peak field	Critical Current Density	2013 Cost performance	COP(*) at Operating T
NbTi	4.2 K	5 T	750 A/mm^2	5 €/kAm	70
MgB_2	20 K	1.8 T	100 A/mm^2	22,5 €/kAm	14
YBCO	40 K	3 T	400 A/mm^2	200 €/kAm	6,5

(**) Coefficient of performance-Carnot. It is used to characterise the cooling systems

10 MW class MgB_2 superconducting light weight generator

It gives answer to the offshore sector demands while overcomes other superconducting generators challenges.

- Direct drive
- 10 MW, 8.1 rpm, 11.8 MNm
- 11.9 m air-gap diameter,
- 0.52 m stack length
- 1.5 T of induction peak value
- Airgap shear stress of 112 kPa
- MgB_2 superconducting field coils
- Cryogen free cooling system (reduce maintenance requirements)
- Modular Cryostats
- 60 warm iron poles
- Air-gap armature winding

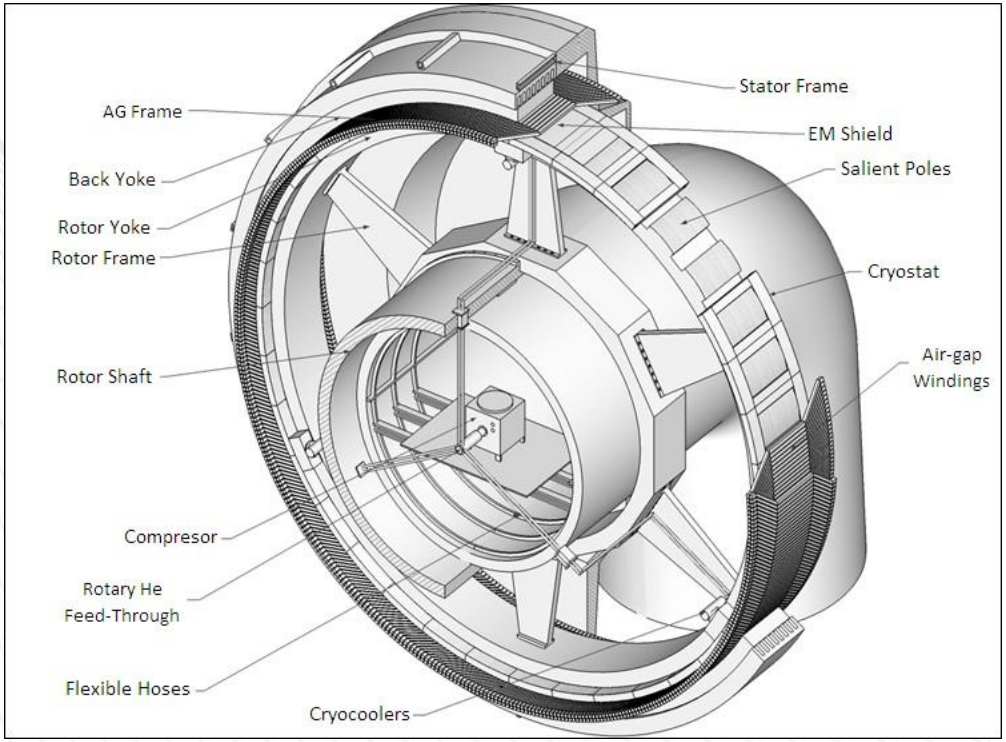

Patented by TECNALIA (PTC/ES2009/070639)

Challenges

MgB_2 wire

- Discovered in 2001
- Limited experience in coil manufacturing

cryogen-free cooling

- Complex design of cryostat
- Low efficiency of cryocoolers

Technology development and validation through a Small Scale Generator

- Scaling based on the reduction of number of poles (4 warm iron poles)
- Identical coils and modular cryostat size
- Same field excitation
- Same cooling and torque transmission systems
- Same airgap shear stress (112 kPa),
- ~ 0.5 MW, ~120 rpm and ~40 kNm.

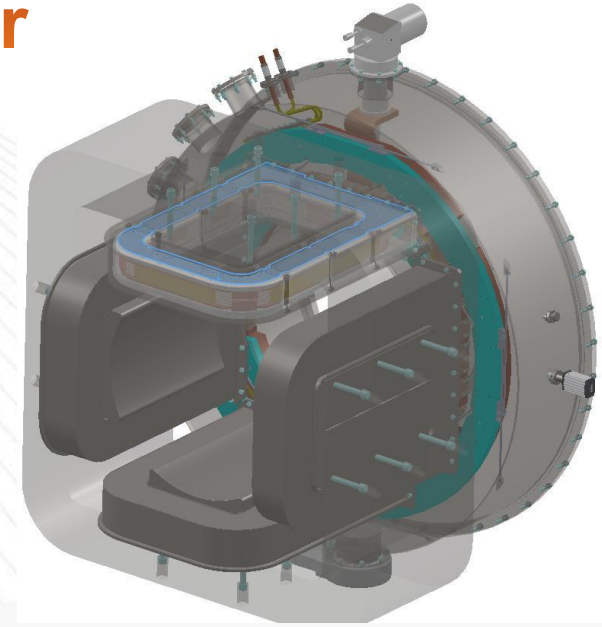

Development Plan

2011 | 2013 | 2015 | 2017 | 2020

Generator Design

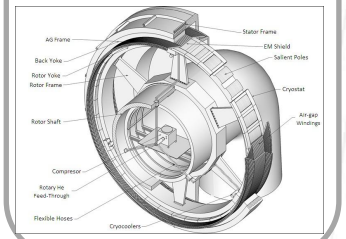

Patent granted

Applied SC facilities

European FP7 funding

MgB2 coil development

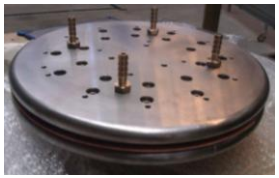

Cryostat and cooling system design and validation

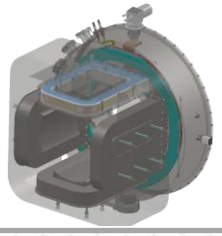

Demonstrator construction and validation

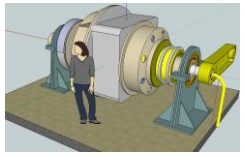

Industrial Studies

Business Plan

Industrial Development

SUPRAPOWER: 5.4 M€ project 4 years project. Tecnalia leads a consortium constituted by Columbus, KIT, Oerlikon, ELU, University of Southampton, D2M and Acciona

Why MgB_2? It is and industrial solution with already competitive cost performance ratio.

	MgB_2
Application range	15 K – 25 K with B up to 4 T 4.2 K -12 K with B up to 10 T
Cooling system	GHe, Cryogen Free, LH_2
Shape	round/square/flat
Length in a batch	1.5 to 3 km
Availability	Immediate
Customization	Sheath materials, dimensions, number of SC filaments, stabilization
Average price (2013)	3 to 4.5 €/m

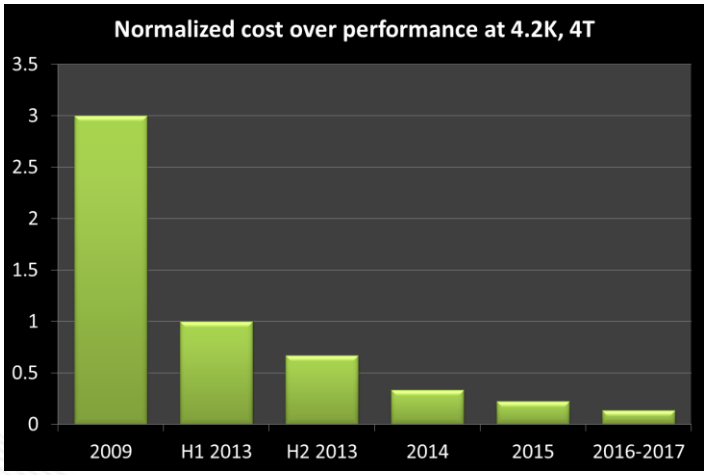

Decreasing Cost performance:

- Decreasing cost
- Enhancement of the SC performance

Data and picture courtesy of Columbus Superconductors

MgB2 field coils

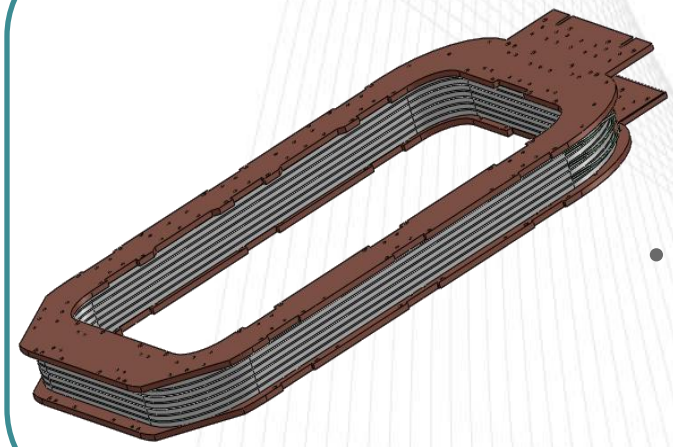

- Stack of several MgB_2 double pancakes racetrack coils, connected in series, placed between 2 thick copper plates for refrigeration of the assembly.
- MgB_2 sandwich tape-like wire, it can be easily wounded in pancakes, but not in a continuous coil.
- Quench detection and protection system .

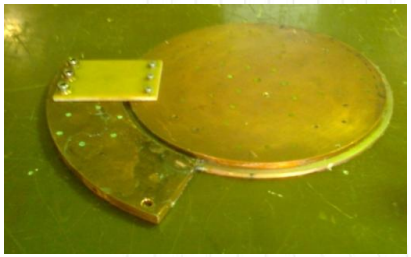

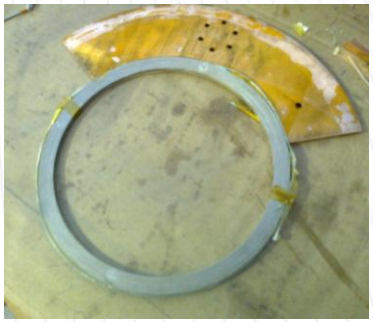

- Dummy coils have been developed to validated the design, cooling concept and manufacturing process.
- Thermal and quench simulations validation.

Rotating modular cryogen free cooling system

- Designed for facilitating offshore installations and maintenance operations
- The concept consists on a modular cryostat per pole and a thermal collector
- Warm iron poles configuration:
  - Reduction of mass to be cooled
  - Reduction of torque transmitted to superconducting coils
- Cryogen-free conduction cooling in rotor.
  - Commercial GM cryocooler (robust, reliable and low maintenance)
  - Simpler cryostat compared to liquid based solutions.
- Technical details:
  - Cold heads rotate jointly with SC coils
  - Rotary joint is required to connect the He compressor to the cold head

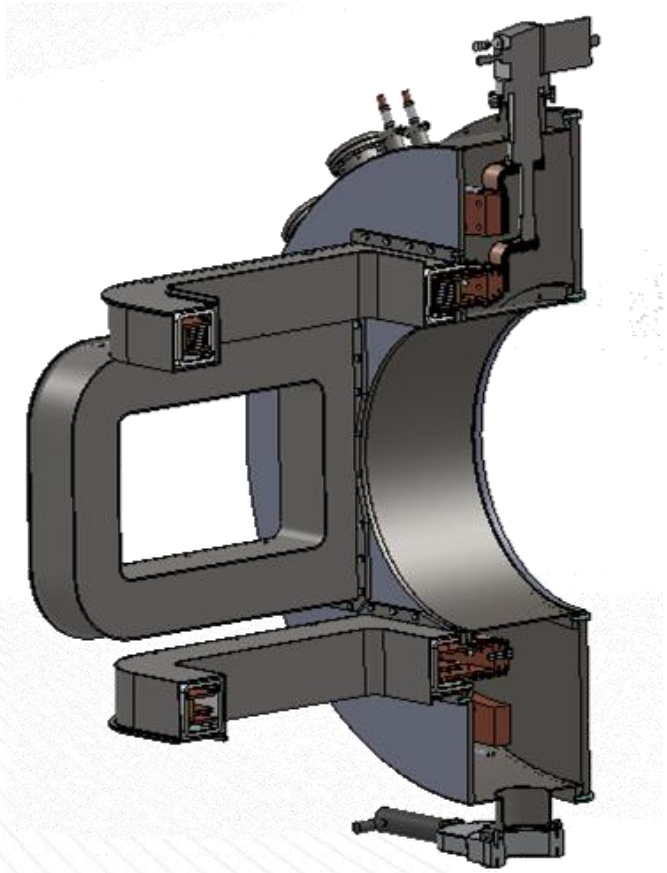

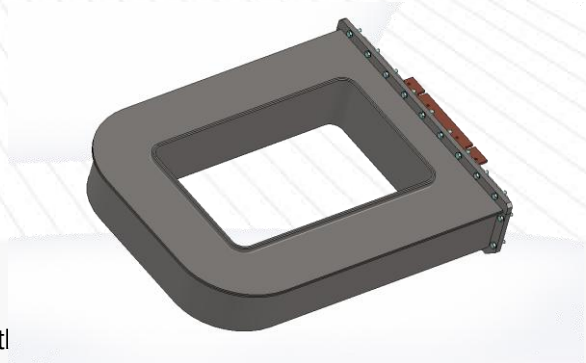

Generator integration

- Direct drive generator mechanical integration must be considered. Supporting structure is part of the generator.
- Mechanical air gap must absorb misalignments at large diameters.
- Minimization of the distance between wind turbine axis and nacelle yaw bearing plane to avoid stresses over it.
- A structure of arms will support the generator rotor to the wind turbine and transmit mechanical torque.
- Similar structure to attach the stator to the nacelle goose neck.

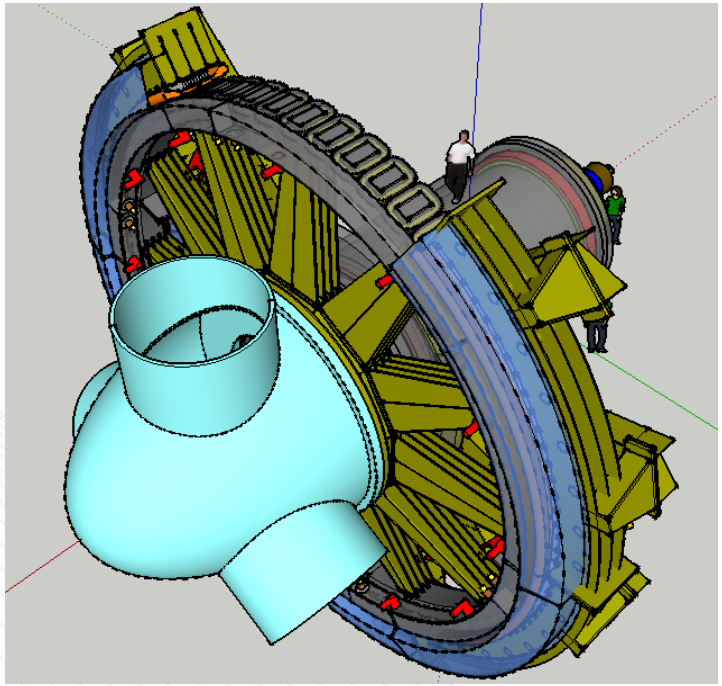

- Components of large diameter have been designed in several segments (typically 6 or 12)

CONTENT

- Offshore wind
- Superconducting generators
- Comparative study
- Conclusion

Comparison Superconducting vs Permanent Magnet

Comparison of volumes, weights, efficiencies and costs of generators including structural parts

Rated Power	10 MW
Speed	8.1 rpm
Turbine diameter	211 m
Wind speed (cut out)	25 m/s
Rated blade tip speed	90 m/s
Power Factor	0.95
Grid connection	Full converter

PM

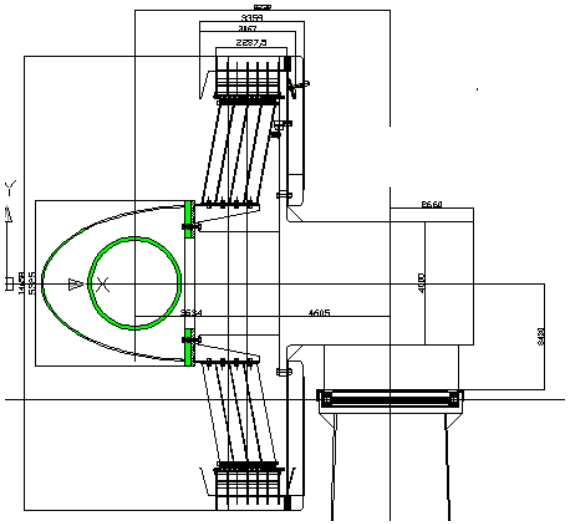

SC

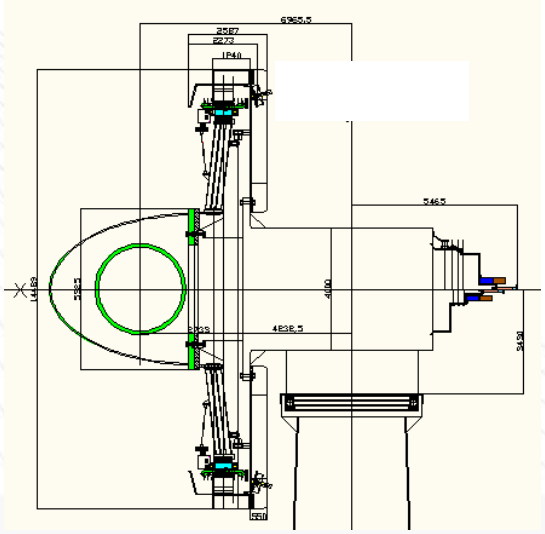

30% less weight than a PM generator

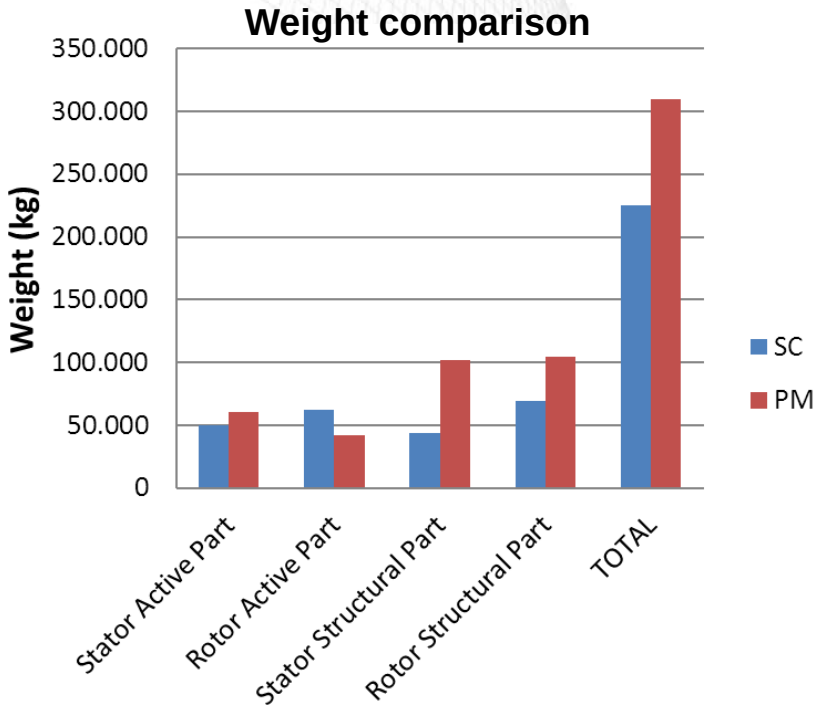

Total weight of SC solution is 26-30% lighter that PMs

Simplify commissioning and O&M works. Reduce other turbine elements cost

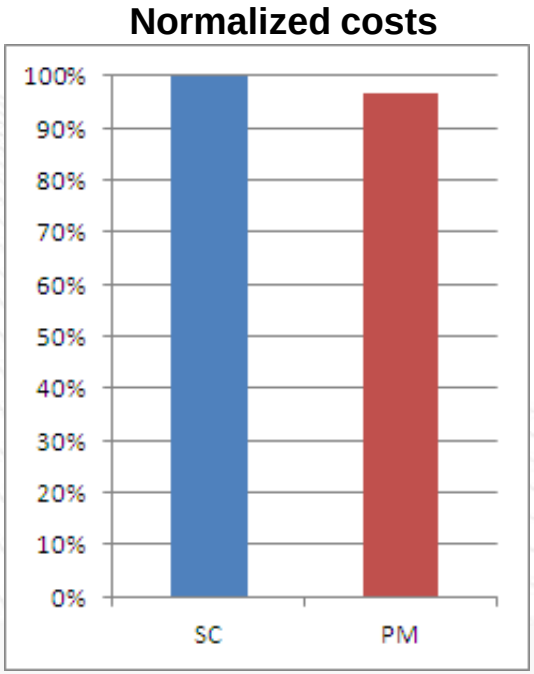

Cost in the range of Permanent Magnets generator at the current cost of NdFeB magnets (December 2013)

MgB_2 is slightly over 11% of generator costs
Rare earth is over 12% of the costs

Higher Efficiency than a PM generator

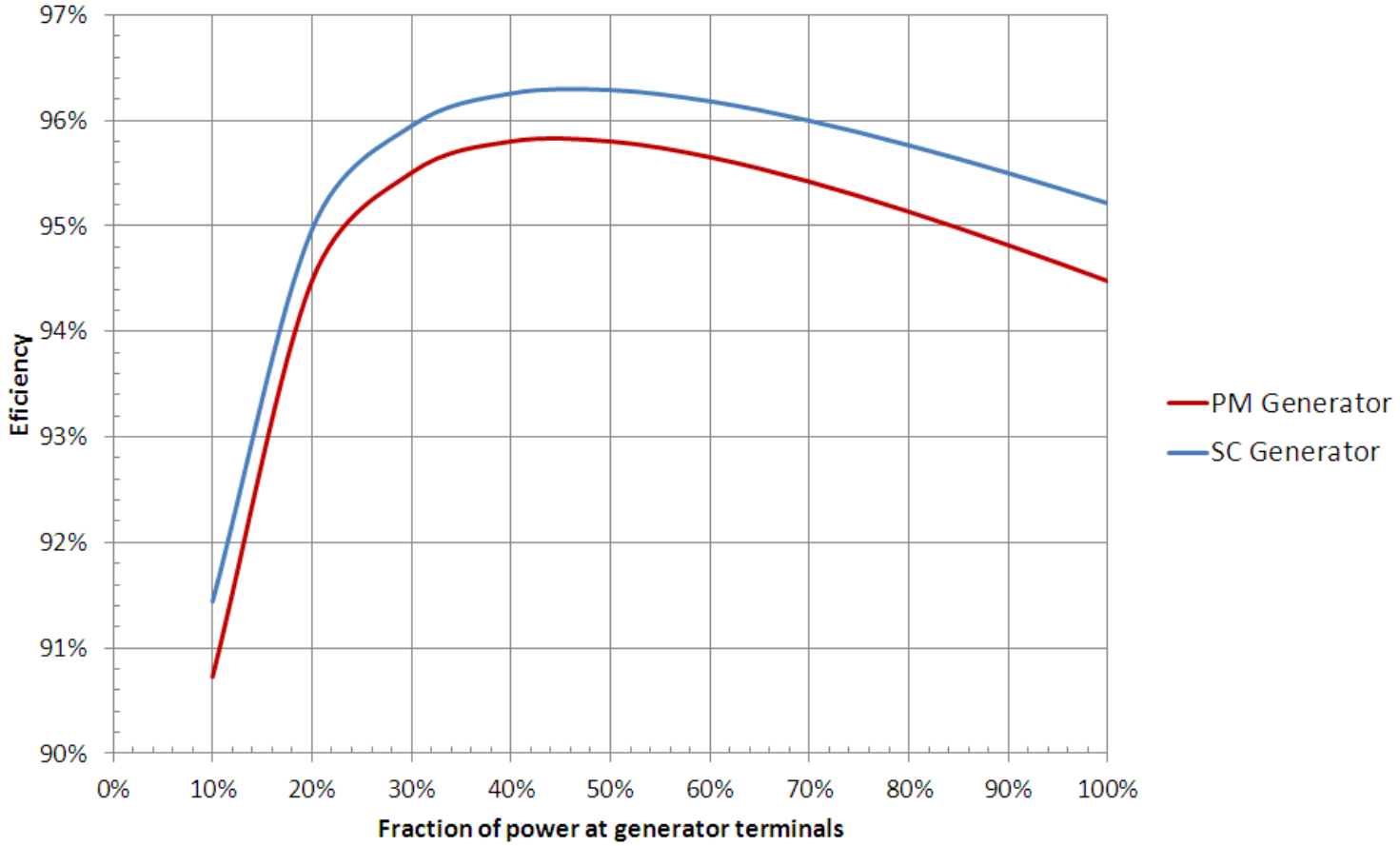

Additional 0.25-0.5% efficiency could be expected

CONTENT

- Offshore wind
- Superconducting generators
- Comparative study
- Conclusion

Competitive advantages

Reliable & Efficient

- Direct drive (no gearbox)
- Cryogen free modular cooling system. Easy and Reduced maintenance.
- Over 95 % efficiency (on-site).

Weight reduction

- 30% weight reduction with respect to a 10 MW Permanent Magnet generator.
- Easier installation and so reduction of vessels and crane costs and reduction of mechanical requirements for foundations and floating platforms.

Free of Rare-earths

- PM generators are very dependent on rare earths materials while TECNALIA's generator is free of rare earths (High price volatility 600 % in 2011)

Cost competitive

- Cost competitive, in the range of the PM's at current cost rare earths
- MgB2 is commercially available and very cost competitive material

Thanks for your interest

Iker Marino
Project Manager
ENERGY AND ENVIRONMENT DIVISION / TECNALIA
M +34 664 111 060
Iker.marino@tecnalia.com

TECNALIA
Parque Tecnológico de Bizkaia
c/Geldo, Edificio 700
E-48160 Derio - Bizkaia (Spain)
T 902 760 000 (Tecnalia)
T +34 946 430 850 (International calls)
www.tecnalia.com